PAW GmbH & Co. KG
Böcklerstr. 11, D-31789 Hameln, Germany
Tel.: +49-5151-9856-0, Fax: +49-5151-9856-98
Email: info@paw.eu, Web: www.paw.eu

# Installation and Commissioning Instructions

# Low Temperature Zone Module

# F38 - 1¼" (DN 32)

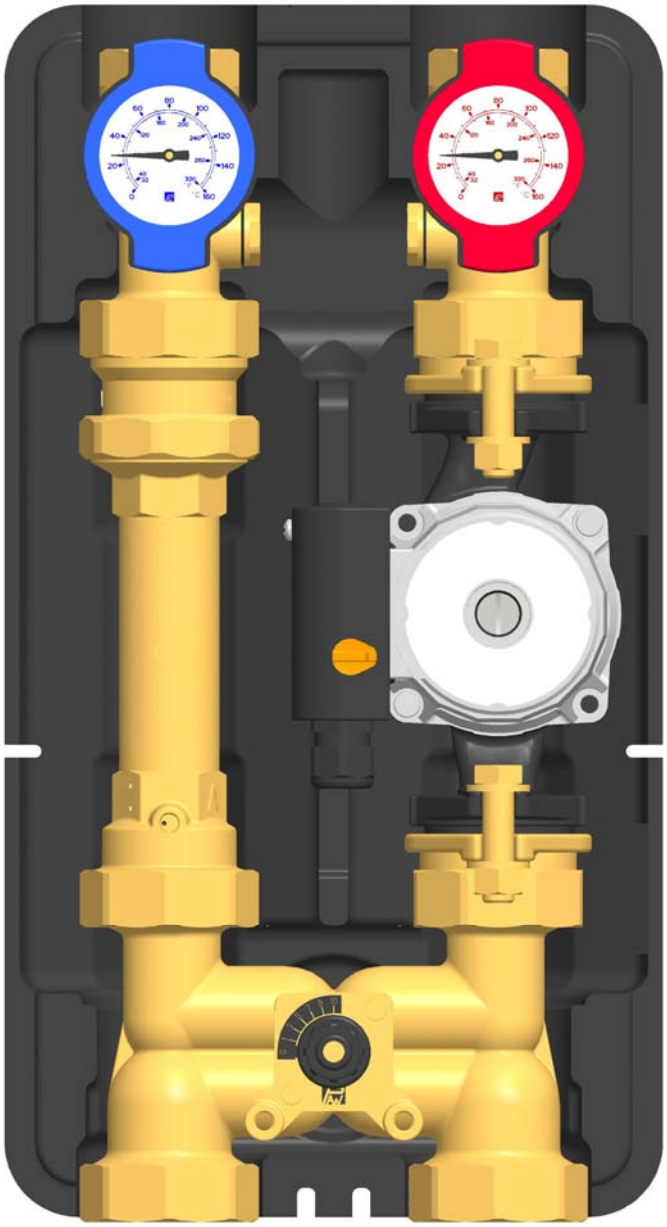

item no. 99473908xNA – version V01 – issued 2008/02

We reserve the right to make technical changes without notice!

Printed in Germany – Copyright by PAW GmbH & Co. KG

PAW GmbH & Co. KG

Böcklerstr. 11

31789 Hameln, Germany

## Contents


1 General information ..... 4

1.1 Scope of these instructions ..... 4

1.2 Designated use ..... 4

2 Safety instructions ..... 5

3 Product description ..... 6

3.1 Equipment ..... 6

3.2 Function ..... 9

3.2.1 Mixing valve [specialist] ..... 10

3.2.2 Check valve [specialist] ..... 11

3.3 Accessories: Actuator (not included in delivery) ..... 12

4 Assembly and installation [specialist] ..... 13

4.1 Option 1: Installation of the manifold ..... 13

4.2 Option 2: Installation of the wall brackets with mounting plate ..... 14

4.3 Installation of the zone module and commissioning ..... 15

4.4 Accessories: Compression-ring coupling (not included in delivery) ..... 18

5 Scope of delivery [specialist] ..... 19

6 Technical data ..... 20

6.1 Pressure drop ..... 21

# 1 General information

## 1.1 Scope of these instructions

These instructions describe the function, installation, commissioning and operation of the F38 low temperature zone module. For other components of the installation, such as pumps, controllers and manifolds, see the manufacturers' instructions. The chapters called [specialist] are directed to specialists only.

## 1.2 Designated use

The zone module may only be used in hydronic heating closed-loop systems taking into consideration the technical limit values indicated in these instructions. The zone module must **not** be used in any applications for fuel or oil and domestic water applications such as jacuzzis.

The wrapping materials are made of recyclable materials and can be disposed of with recyclable materials.

# 2 Safety instructions

The installation and commissioning of the zone module as well as the connection of electrical components require technical knowledge commensurate with a recognised vocational qualification as a fitter for plumbing, heating and air conditioning technology, or a profession requiring a comparable level of knowledge [specialist]. The following must be observed during installation and commissioning:

- Relevant local and national prescriptions
- Accident prevention regulations of the professional association
- Instructions and safety instructions mentioned in these instructions

All field wiring made during installation must comply with:

- National Electrical Code NFPA 70 and any other national, state, provincial or local codes or requirements
- In Canada, CSA C22.1 Canadian Electrical Code Part 1, and any other local codes

**Attention**

The F38 PAW zone module may only be used in hydronic heating closed-loop systems taking into consideration the technical limit values indicated in these instructions. The zone module must **not** be used in any applications for fuel or oil and domestic water applications such as jacuzzis.

**Attention: Material damage due to mineral oils!**

It is imperative to avoid that the EPDM sealing elements of the station get in contact with substances containing mineral oils. Mineral oil products cause lasting damage to the material, whereby its sealant properties are lost.

If necessary, ask the manufacturer whether the solar fluid, fats or installation aids contain mineral oils.

We do not assume liability nor provide warranty for damage to property resulting from sealants damaged in this way.

# 3 Product description

The F38 zone module is a preassembled fitting group for hydronic heating closed loop systems.

It is equipped with isolation valves, so that the pump can be easily maintained or changed.

It is designed such that it can be directly mounted onto a PAW distribution manifold or a mounting plate with thread connections. Only use PAW accessories in combination with the zone module.

## 3.1 Equipment

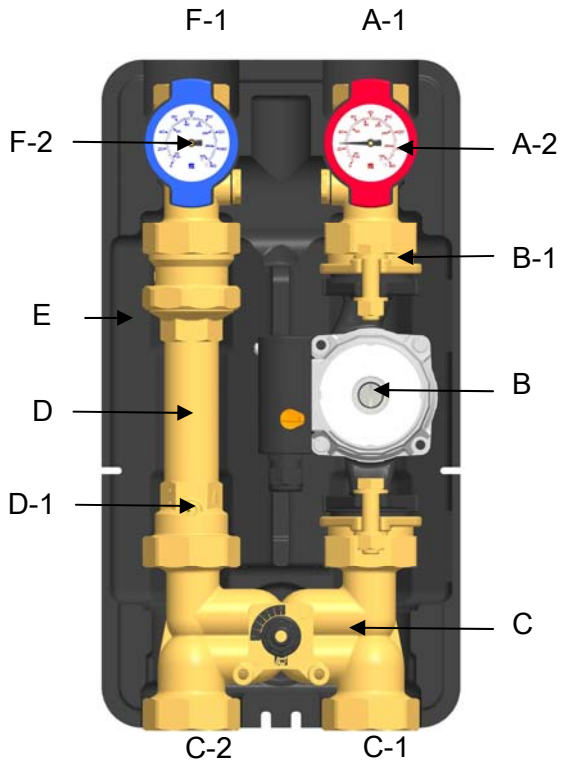


| | |
|---|---|
| A-1 | Supply (zone) |
| A-2 | Ball valve in the supply with integrated temperature gauge handle |
| B-1 | Swivel flanges |
| B | 3-speed pump |
| C | 4-way mixing valve |
| C-1 | Supply (boiler loop) |
| C-2 | Return (boiler loop) |
| D-1 | Flow check valve |
| D | Return pipe |
| E | Design insulation with optimized function |
| F-2 | Ball valve in the return with integrated temperature gauge handle |
| F-1 | Return (zone) |

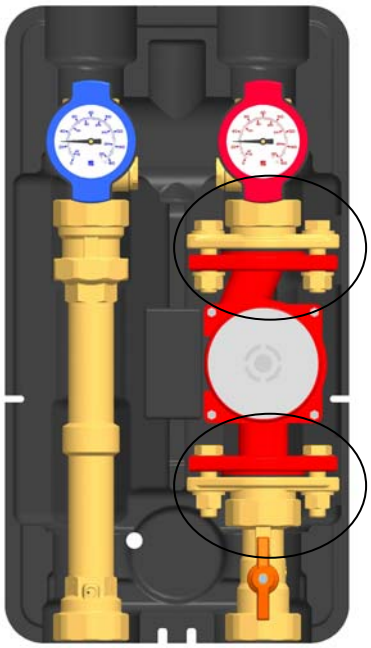

The F38 is equipped with swivel flanges for the integration of flanged and 90° rotated flanged pumps.

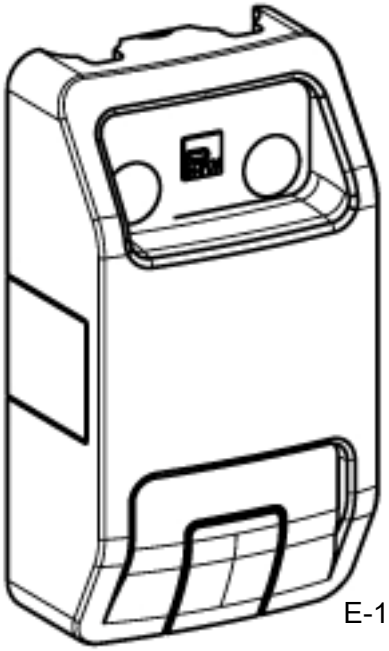


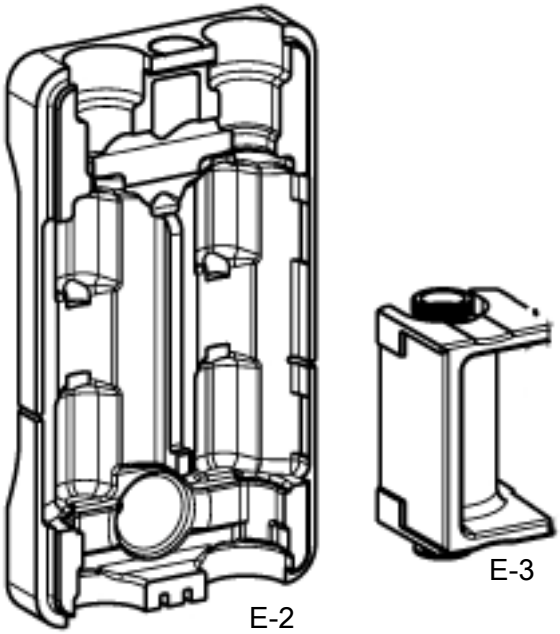


The insulation consists of three parts:

- the front shell (E-1)
- the back shell (E-2)
- and the return pipe insulation (E-3)

If the pump is too large, you can use an appropriate knife and cut a hole into the front insulation shell along the pre-cut lines.

## 3.2 Function

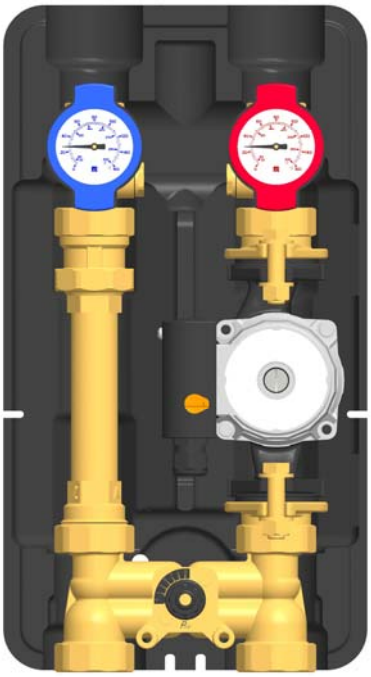

### F38 - Zone module with 4-way mixing valve

F38 low temperature zone modules are replacing conventional injection mixing systems. In conjunction with electronic reset control and a direct drive actuator, a 4-way mixing valve is modulated, radiant return water is diverted and mixed with hot water from the boiler.

### Applications:

- for boilers with a constant volume flow in the boiler loop

### 3.2.1 Mixing valve [specialist]

The supply temperature of the zone module is controlled by the mixing valve.

In case of maintaining the mixing valve, please order the special gasket set which is available as spare part.

Position 0: the mixing valve is closed

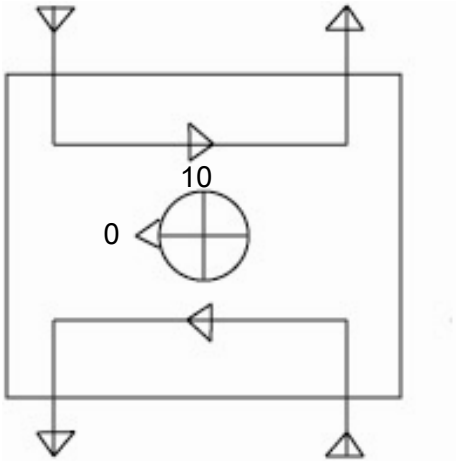


Position 10: the mixing valve is fully open

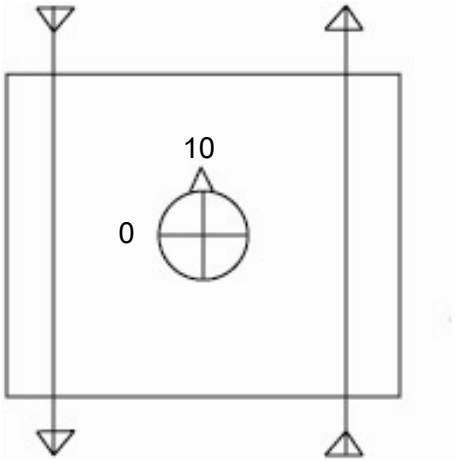


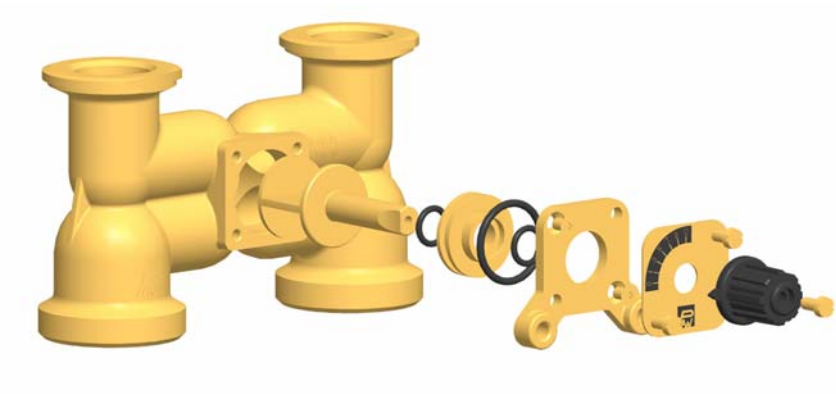

### 3.2.2 Check valve [specialist]

The F38 zone module is equipped with a check valve (D-1) in the return pipe (D). The check valve is spring-operated. The opening pressure is 2 kPa.

**Operation**

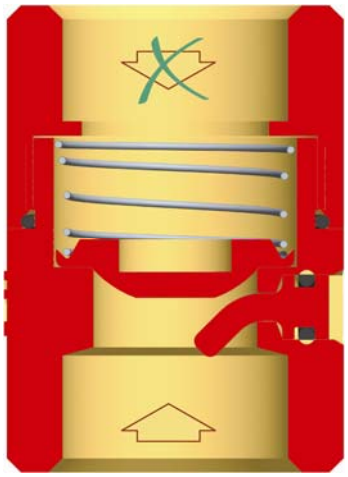

During operation the mark must be directed to "Z".

→ The check valve is operating.

→ Flow only in one direction

**Filling, emptying, bleeding**

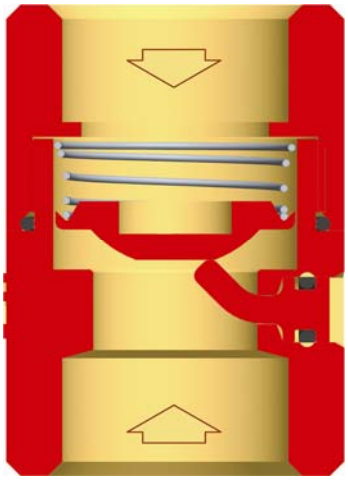

For filling, emptying and bleeding the mark must be directed to "A".

→ The check valve is lifted (not operating)

→ Flow in both directions

## 3.3 Accessories: Actuator (not included in delivery)

The PAW actuator type SR10 - 24/3P is available as an accessory (item # 7054). It is for weather-compensated control and includes a cable and a mounting set for halting assembly onto the PAW mixing valves. It operates the mixing valve.

# 4 Assembly and installation [specialist]

The F38 zone module must be mounted either on a PAW distribution manifold or on a set of wall bracket and mounting plate. The distribution manifold, the wall brackets and the mounting plate are not included in delivery.

**Attention**

The location of installation must be dry, load-carrying and frost-proof to prevent material damage to the installation.

## 4.1 Option 1: Installation of the manifold

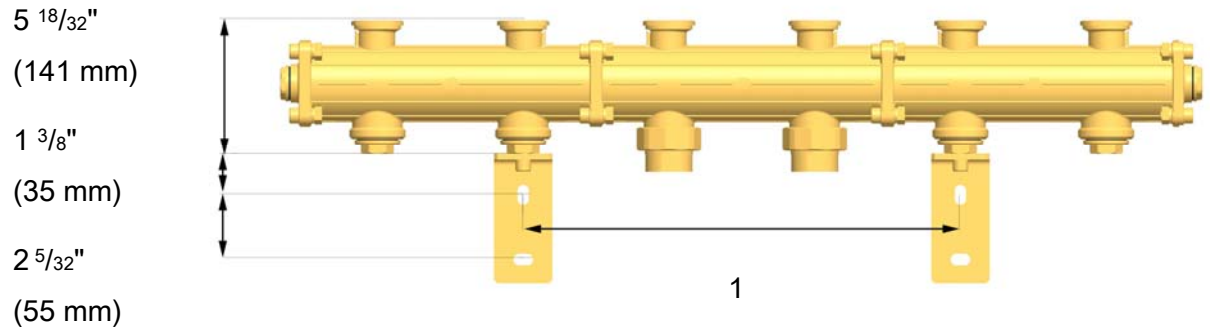


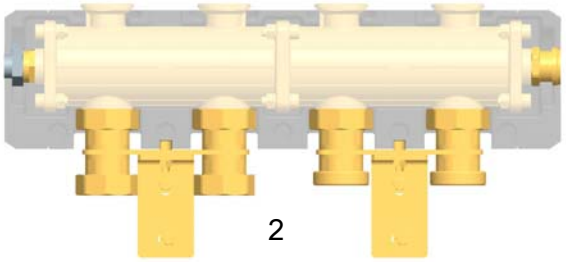


Install the distribution manifold to the wall either with wall brackets (1) or onto a mounting plate (2) as described in the instructions.

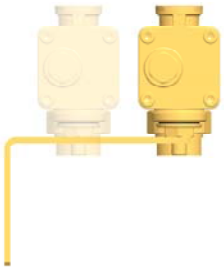

If possible, choose the largest distance to the wall, so that the insulation of the manifold can be easily mounted and changed.

## 4.2 Option 2: Installation of the wall brackets with mounting plate

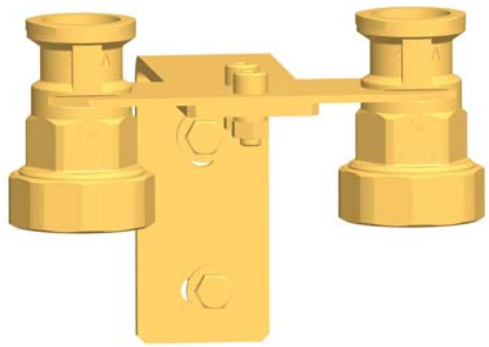

1. Choose the position for installation.
2. Copy the mounting holes for the wall bracket onto the mounting surface.
3. Drill the holes and insert the wall anchors.
4. Fix the wall bracket to the wall with the screws and washers.
5. Screw the mounting plate onto the wall bracket.

## 4.3 Installation of the zone module and commissioning

The zone module can be installed

- Option 1: on a PAW distribution manifold. In this case a check valve (C-3) must be installed in the return line of the mixing valve to prevent unwanted circulation.

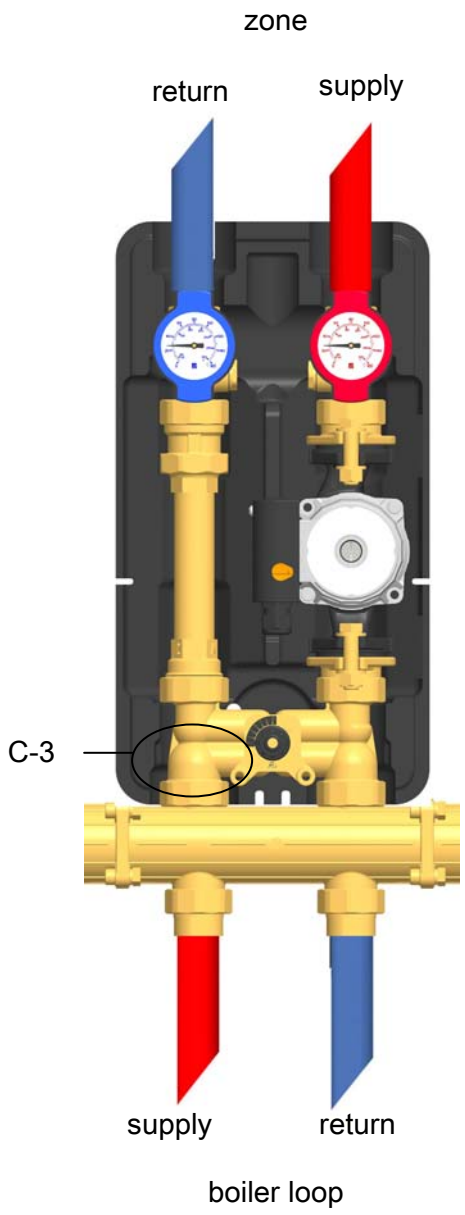


- Option 2: on a PAW mounting plate with thread connections

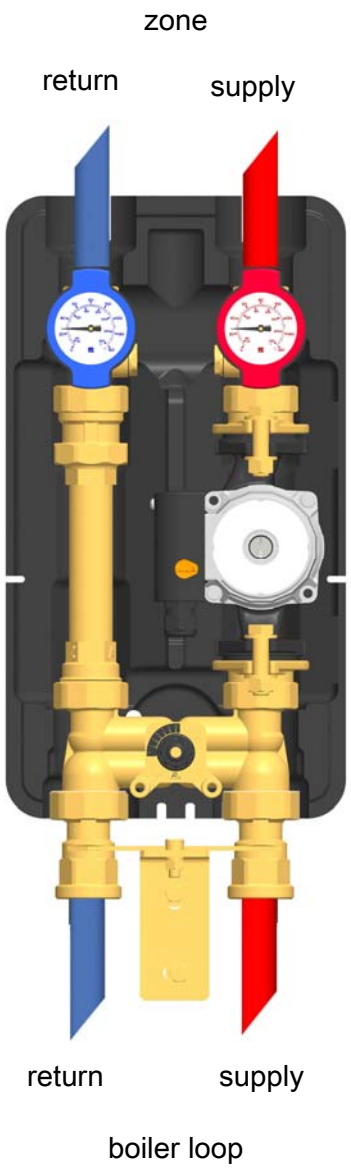

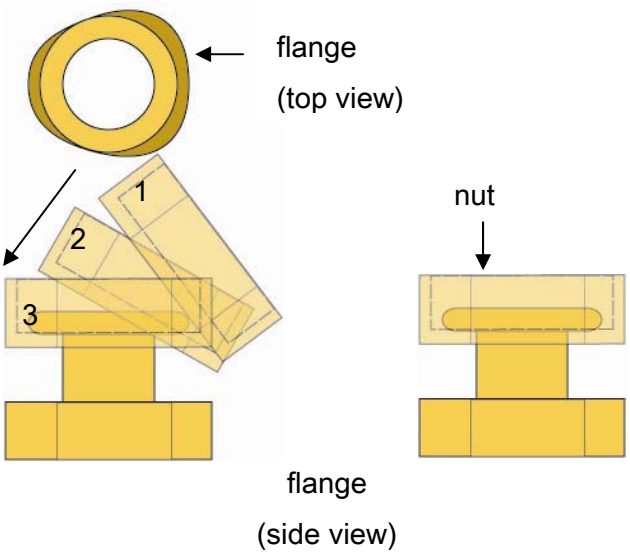


1. Take off the temperature gauge handles (A-2, F-2) and remove the front insulation shell (E-1) of the zone module. Remove the return pipe insulation (E-3).
2. Screw off the union nuts (C-1, C-2) and take off the sealing rings of the zone module.
3. Flip the two nuts over the two flanges as shown in the figure.

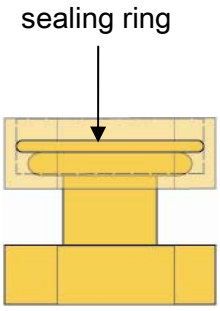


3. Insert the sealing rings into the nuts.
4. Put the zone module onto the two nuts.
5. Tighten the nuts. Take care that the nuts do not get jammed and that the sealing rings do not slip.
6. Connect the upper connections (A-1, F-1) of the zone module to the installation. The connection must be stress-free.
7. Connect the distribution manifold or the lower connections of the mounting plate to the boiler (do not forget the sealing rings). The connection must be stress-free.
8. Connect the pump (B) to the controller.

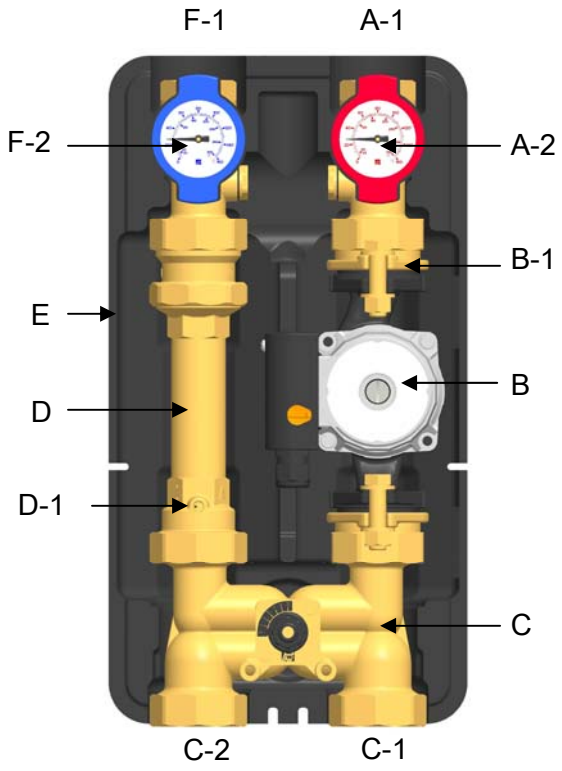


9. Check and tighten all the thread connections and union nuts, then carry out the pressure test.
10. Mount the return pipe insulation (E-3) and the front insulation shell (E-1) of the zone module and attach the temperature gauge handles (A-2, F-2). Mount the insulation of the distribution manifold.

## 4.4 Accessories: Compression-ring coupling (not included in delivery)

The connection to the heating installation can be carried out fast, pressure-proof and without soldering when you use the optionally available compression-ring couplings.

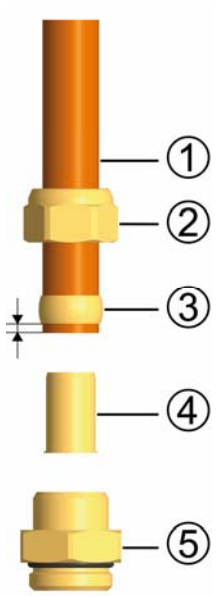


Not included in delivery!

1. Push the union nut ② and the ring ③ onto the copper pipe ①. To guarantee secure load transmission and sealing, the pipe must extend at least 3/8" (3 mm) out of the ring.
2. Insert the support sleeve ④ into the copper pipe.
3. Insert the copper pipe with the plugged-on individual parts (②, ③ and ④) all the way into the housing of the compression-ring coupling ⑤.
4. First screw the union nut ② manually.
5. Tighten the union nut ② by rotating one full turn. Secure the housing of the compression-ring coupling ⑤ against distort in order to avoid damaging the sealing ring.

# 5 Scope of delivery [specialist]

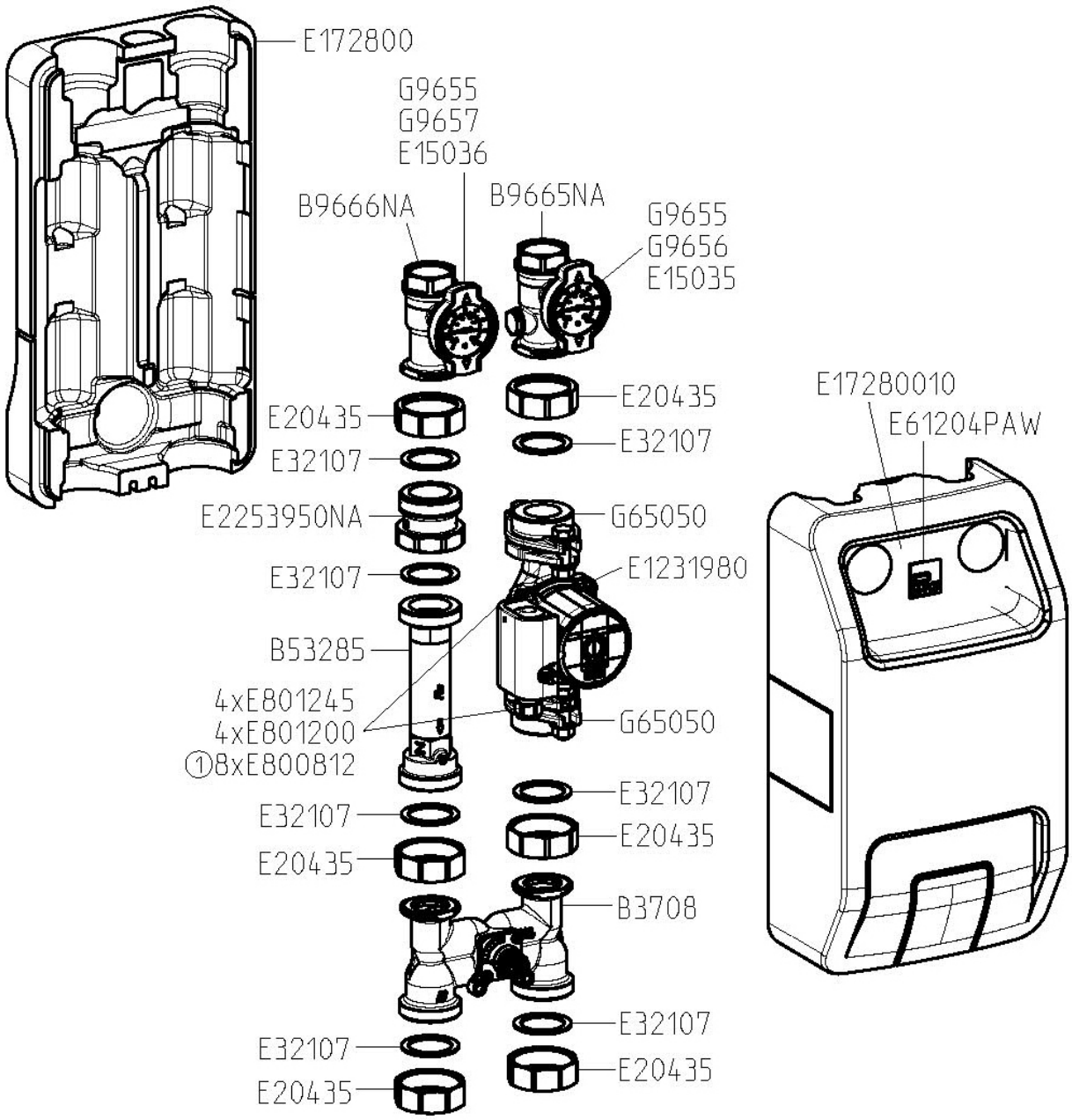

# 6 Technical data

| F38 | 1¼" | DN 25 |
|---|---|---|
| **Dimensions** | " | mm |
| Center distance (1) | 4 21/32 | 125 |
| Total width (2) | 9 27/32 | 250 |
| Total height (3) | 18 3/16 | 462 |
| Installation length (4) | 17 1/8 | 435 |
| **Connections** | | |
| Zone module outlet (A-1, F-1) | 1¼" female thread | |
| Zone module inlet (C-1, C-2) | 2” male thread | |
| **Technical data** | | |
| Opening pressure check valve (D-1) | 2 kPa, can be opened | |
| **Materials** | | |
| Fittings | Brass | |
| Gaskets | EPDM/NBR | |
| Insulation (E) | EPP | |

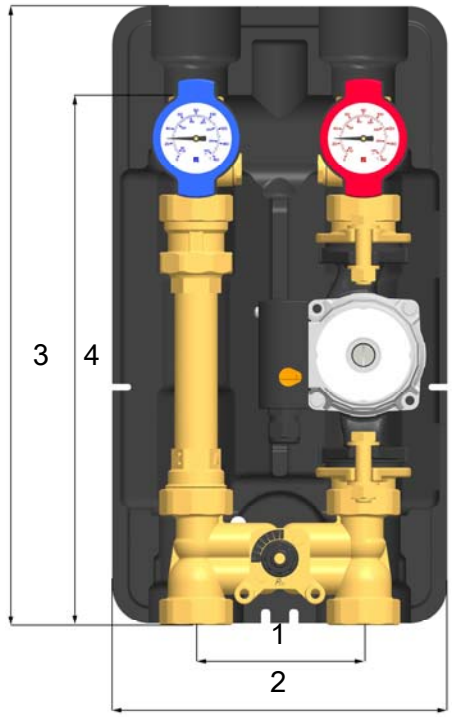


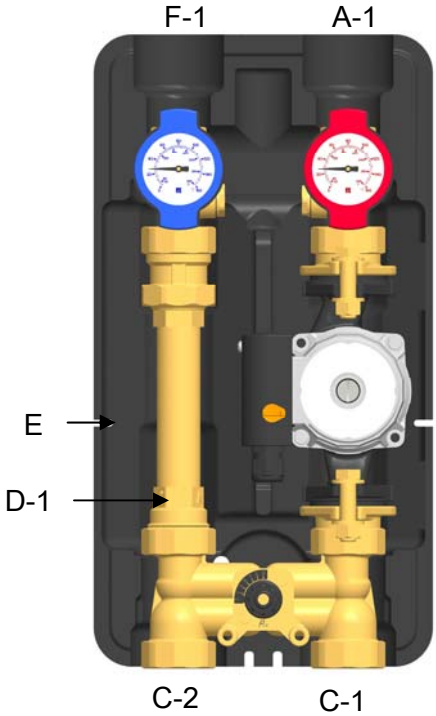

| F38 | 1" | DN 25 |
|---|---|---|
| **Hydraulics** | | |
| Pressure, maximum | 87 psi | 6 bars |
| Temperature, maximum | 230 °F | 110 °C |
| CV value | 7.3 | |

## 6.1 Pressure drop

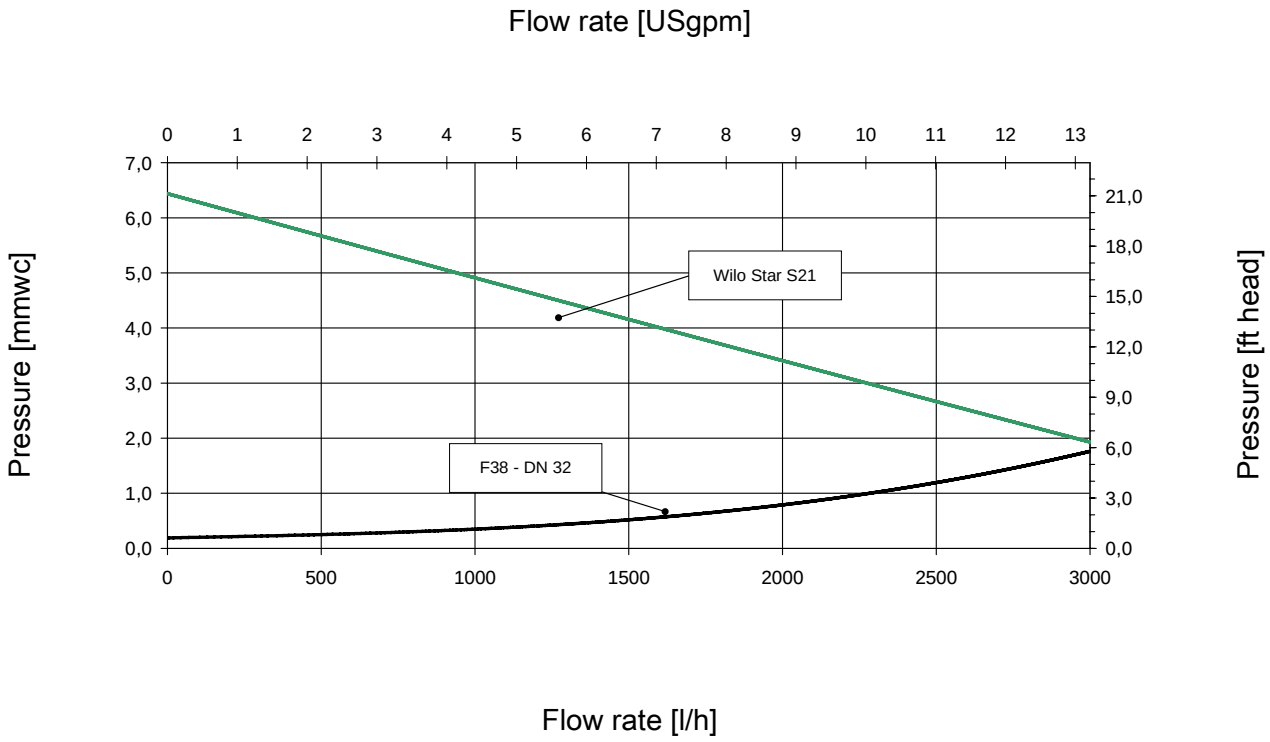

PAW GmbH & Co. KG
Böcklerstraße 11
31789 Hameln, Germany

www.paw.eu
Phone: +49 (0) 5151 9856 -
Fax: +49 (0) 5151 9856 98