BELIMO

ZONE... Series

Application

This valve is typically used on fan coil units, baseboards or other hydronic applications where fail safe operation or 2-wire control is required. This valve is suitable for use in a hydronic system with variable or constant flow.

This valve is designed to fit in compact areas where on/off control is required using 24 VAC, 120 VAC or 230 VAC.

Valve Specifications

Service	chilled or hot water, 50% glycol
Flow characteristic	Two-way on/off Three-way on/off, diverting
Sizes	1/2”, 3/4” and 1”
Type of end fitting	female, NPT or Sweat
Materials:	
Body	forged brass
Stem	stainless steel
Seals	EPDM
Pressure rating	300 psi
Media temp. range	32°F to 212°F [0°C to 100°C]
Close off pressure	20 – 75 psi
Leakage	Class III 0.1%
Cv rating	1.0 – 8.0

U.S. & Foreign Patent Pending

Actuator Specifications

Control	On/off
Nominal voltage	24 VAC 50/60 Hz ± 10% 120 VAC 50/60 Hz ± 10% 230 VAC 50/60 Hz ± 10%
Power Consumption	6.5 W
Transformer Sizing	7VA (Class 2 power source)
Electrical Connection	Wire lead length, 120V 6” 230V 6” 24V 18”
Position Indication	Integrated into lever (NC only)
Running Time Motor:	20-40 seconds
Spring:	5 seconds
Humidity	5 to 95% non-condensing
Ambient Temperature	32°F to 104°F (0°C to + 40°C)
Storage Temperature	-40°F to 176°F (-40°C to +80°C)
Housing Rating	UL94-5V(B)
Agency Listing	cULus
Noise Level	max. 35 db (A)
Quality Standard	ISO 9001
Built-in Auxiliary Switch (optional)	1 x SPDT, 5A resistive (5A inductive) @ 24 VAC 1 x SPDT, 5A resistive (5A inductive) @ 120 VAC 1 x SPDT, 5A resistive (5A inductive) @ 230 VAC

LISTED 94 D5 TEMP. IND. & REG. EQUIP. c UL us

Dimensions

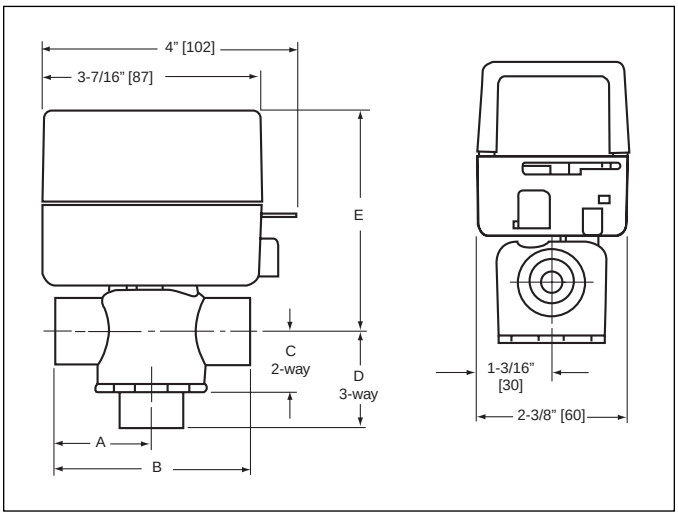

Connection Size and type	A in. (mm)	B in. (mm)	C in. (mm)	D in. (mm)	E in. (mm)
1/2” sweat	1-5/16” [34]	2-5/8” [38]	15/16” [24]	1-5/16” [34]	3-1/2” [89]
3/4” sweat	1-3/8” [35]	2-3/4” [70]	15/16 [24]	1-1/2” [38]	3-1/2” [89]
1” sweat	1-11/16” [43]	3-3/8” [86]	15/16” [24]	1-9/16” [39]	3-11/16 [93]
1/2” NPT	1-7/16” [36]	2-7/8” [72]	15/16 [24]	1-1/4” [32]	3-1/2” [89]
3/4” NPT	1-9/16” [39]	3-1/16” [92]	15/16 [24]	1-1/4” [43]	3-11/16” [93]
1” NPT	1-13/16” [46]	3-5/8” [92]	15/16 [24]	1-11/16” [43]	3-11/16” [93]

Wiring

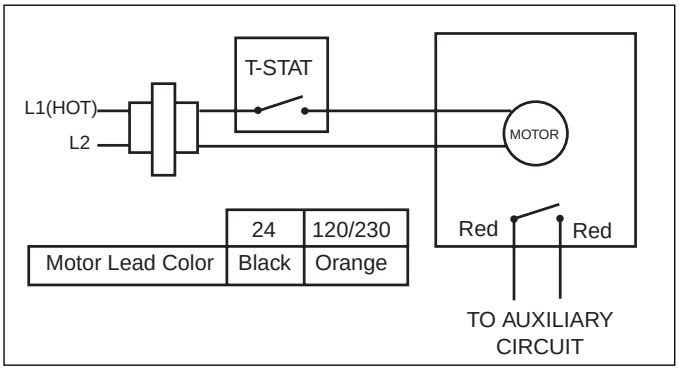

	24	120/230
Motor Lead Color	Black	Orange

Built-in auxiliary switch (optional) (-S models)

H20507-07/05-Subject to change. © Belimo Aircontrols (USA), Inc.

Installation

The valve can be installed vertically or horizontally, but not turned upside down.

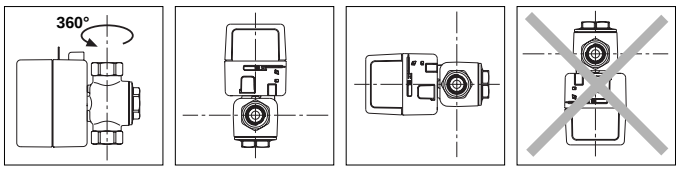

– A 3-way valve cannot be transformed into a 2-way valve and visa versa.

– The flow is from A to B (see diagram below) and must be installed so the paddle closes against the direction of flow as indicated in the following diagrams.

– The 2-way valves can be installed on the supply or on the return; for correct installation it is necessary to respect the direction of flow indicated from the arrow on the body valve.

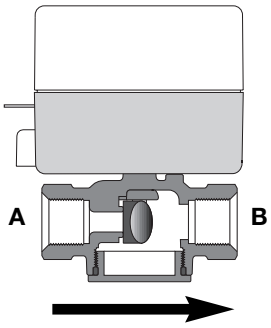

2-way valve normally closed actuator

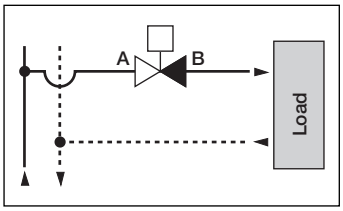

2-way installed on the supply

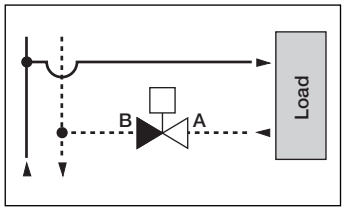

2-way installed on the return

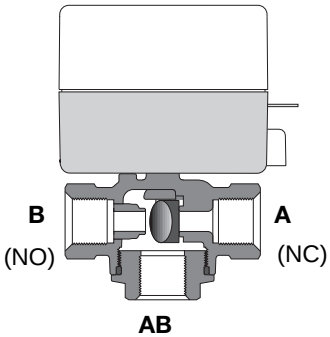

3-way valve normally closed actuator
(Note: 3-way uses only normally closed actuator)

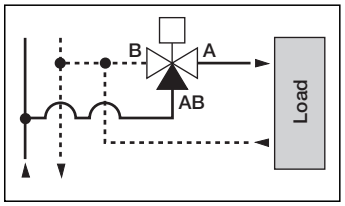

3-way installed on the supply in diverting configuration

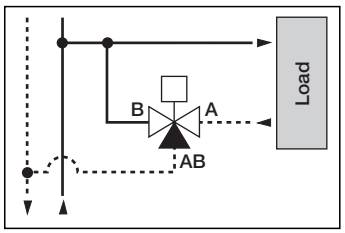

3-way installed on the return

Note: An approximate 30 second delay is possible in valve movement after being powered on.

	2-way	3-way
N.C. without power	Port"A" closed	Port "A" closed Port "B" open Port "AB" open
N.C. open with power	Port"A" open	Port "A" open Port "B" closed Port "AB" open
N.C. manually open	Port"A" open	Port "A" open Port "B" open Port "AB" open

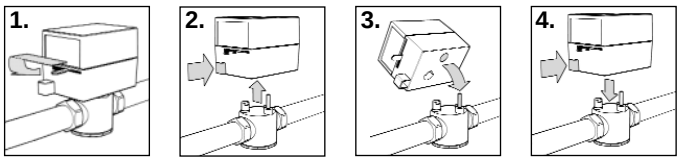

Manual Open

1. The manual opening is achieved by moving the manual opening lever to the locked position. When power is applied, the manual lever unlocks automatically.

Removing the Actuator

1. Move the manual open lever to the lock open position.
2. Press the push button in and pull the actuator up.

Installing the Actuator

1. Move the manual open lever to the lock open position.
3. Align valve stem to the mating actuator hole. Move stem if required for proper alignment.
4. Press the push button in and slide the actuator onto the valve body, release the push button.

SAFETY INSTRUCTION
This safety alert symbol will be used in this manual to draw attention to safety related instructions. When used, the safety alert symbol means ***ATTENTION! BECOME ALERT! YOUR SAFETY IS INVOLVED! FAILURE TO FOLLOW THESE INSTRUCTIONS MAY RESULT IN A SAFETY HAZARD***.

CAUTION: All work must be performed by qualified personnel trained in the proper application, installation, and maintenance of systems in accordance with all applicable codes and ordinances.

CAUTION: Over-tightening and breakage can occur with the use of Teflon pipe joint compounds. Teflon provides lubricity so that care must be exercised not to over-tighten joints. Failure to follow these instructions could result in property damage and /or personal injury.

WARNING: System fluids are under pressure or temperature can be hazardous. Be sure the pressure has been reduced to zero and the system temperature is below 100°F (38°C). Failure to follow these instructions could result in property damage and/or personal injury.

H20507-07/05-Subject to change. © Belimo Aircontrols (USA), Inc.